THE WORLD LEADER IN
FUME EXTRACTION TECHNOLOGY

AD 500 iQ

Advantage

BOFA's AD 500 iQ high end laser extraction system combines extremely large filter capacity with high airflow and pressure rates, making it the ideal choice for heavy duty applications that generate large amounts of particulate and gaseous organic compounds.

Performance has now been further enhanced with the inclusion of several new features including BOFA's new iQ Operating System, making the new AD 500 iQ one of the most advanced system available.

The iQ system takes performance and safety parameters to a new level and ensures that maintenance, downtime and ownership costs are kept to a minimum.

STANDARD FEATURES:

- High airflow and pressure rates
- Reverse flow filter technology
- DeepPleat DUO pre filter
- Combined HEPA/Gas filter incorporating ACF technology
- Filters with long life and low replacement cost
- Automatic flow control system
- Real time airflow reading
- Independent filter condition monitoring, display and warnings
- High contrast display
- 'Run safe' operation
- Remote diagnostics via USB

OPTIONAL FEATURES:

- Smart Filter technology
- VOC gas sensor (Volatile Organic Compound)
- Remote stop / start interface
- Filter change / System fail signal
- Interfacing with host laser
- On-board compressor
- Optional filter media's

The high end laser fume extraction system for laser marking, coding and engraving industries.

- iQ Intelligent Technology
- Featuring DeepPleat DUO filter technology
- Featuring Advanced Carbon Filter technology
- Optional Smart Filter technology

For high performance and long filter life

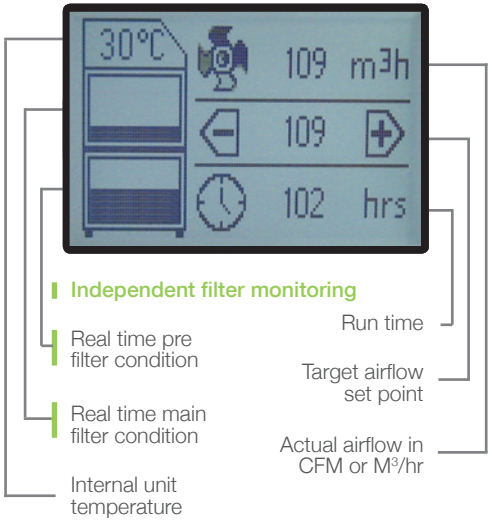

http://www.bofa.co.uk/iqOperationSystem.asp

Take a look at the iQ animation, which explains exactly why the BOFA iQ Operating System provides unrivalled control and data management for your fume extraction unit.

UNITS - PART NUMBERS			OPTIONS			
Model	Voltage	Part No.	24V Stop / Start	Filter change / System failure signal	VOC Monitoring	On-board Compressor
AD 500 iQ Stainless Steel	230V	L0672	A2001	A2002	A2003	A2007
	115V	L0671				
AD 500 iQ Powder Coated	230V	L0662				
	115V	L0661				

REPLACEMENT FILTERS - PART NUMBERS

Model	DeepPleat DUO Pre Filter	Combined HEPA/Gas Filter
AD 500 iQ	A1030222	A1030297

TECHNICAL DATA

	230V	115V
Dimensions (HxWxD)	1197 x 600 x 790mm	47.1 x 23.6 x 31.1"
Cabinet Construction	Brushed stainless steel / Powder coated mild steel	Brushed stainless steel / Powder coated mild steel
Airflow / Pressure	550m³/hr / 100mbar	324cfm / 100mbar
Electrical Data	230v 1ph 50/60Hz Full load current: 9.5 amps / 1.1kw	115v 60/50Hz Full load current: 14.8 amps / 1.1kw
Noise Level	< 60dBA*	< 60dBA*
Weight	135kgs	298lbs
Approvals	CE	CE

* At typical operating speed.

DEEPPLEAT DUO PRE FILTER SPECIFICATIONS

Surface Media Area	30m² approx
Filter Media	Glass Fibre
Filter Media Construction	Maxi Pleat Construction with Webbing Spacers
Filter Housing	Zintec mild steel
Filter Efficiency	F8 (95% @ 0.9 microns)

COMBINED HEPA/GAS FILTER SPECIFICATIONS

Surface Media Area	7.5m² approx
HEPA Filter Media	Glass Fibre
HEPA Media Construction	Maxi Pleat Construction with Webbing Spacers
Filter Housing	Zintec Mild Steel
Treated Activated Carbon	34kgs
Filter Efficiency	99.997% @ 0.3 microns

Other hose kits and filters are available. All of the above units are fitted with our standard filter combinations. For specific applications please call us for details. Replacement filters should always be ordered using the part number on the filters inside your extractor to ensure the correct filter is ordered. Datasheet correct at time of print.

AIRFLOW THROUGH FILTERS

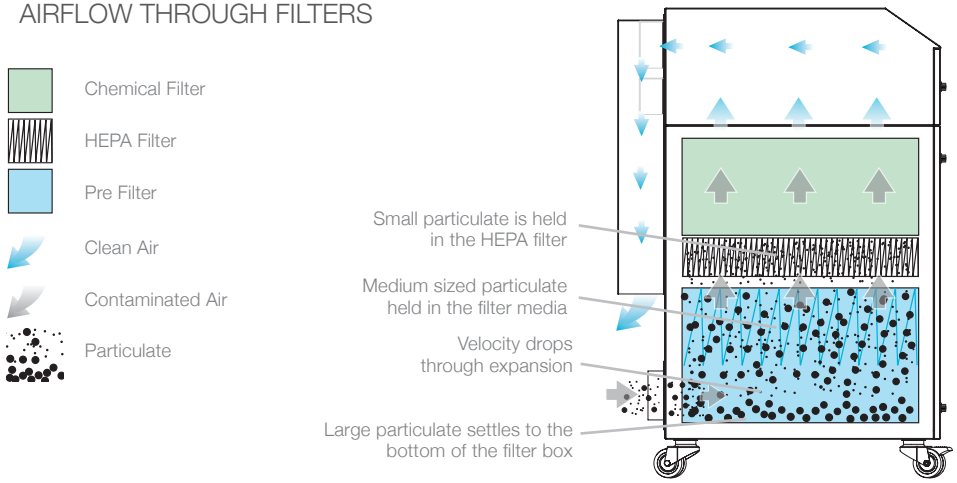

TECHNICAL SPECIFICATION

1 iQ Display
2 On / Off Switch
3 Power Cable
4 Signal / Interface Cable
5 Castors
6 Door Hinge
7 Hose Inlet Connection - 125mm
8 Exhaust Outlet
9 Motor Cooling Inlet
10 Door Latch
11 Motor Cooling Outlet
12 Standby Button

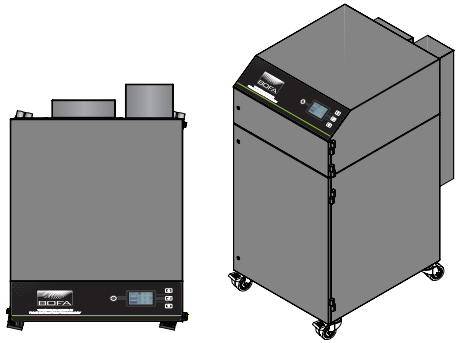

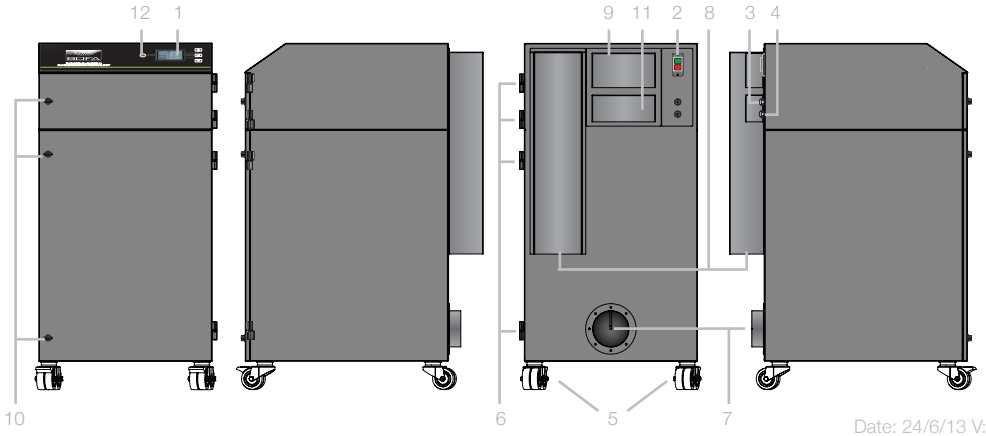

Date: 24/6/13 V:1.2

BOFA INTERNATIONAL LTD
Tel: +44 (0) 1202 699 444 Fax: +44 (0) 1202 699 446 Email: sales@bofa.co.uk Web: www.bofa.co.uk

BOFA AMERICAS, INC
Tel: (618) 205 5007 Fax: (866) 707 2632 Email: sales@bofaamericas.com Web: www.bofaamericas.com

British Quality